BERG HORTIMOTIVE
Burg. Crezeelaan 42a
2678 KZ De Lier - Holland
E-mail: service@berghortimotive.nl
Internet: www.berghortimotive.com
Tel. (+31) (0)174-517700
(+31) (0)174-613293 (service)
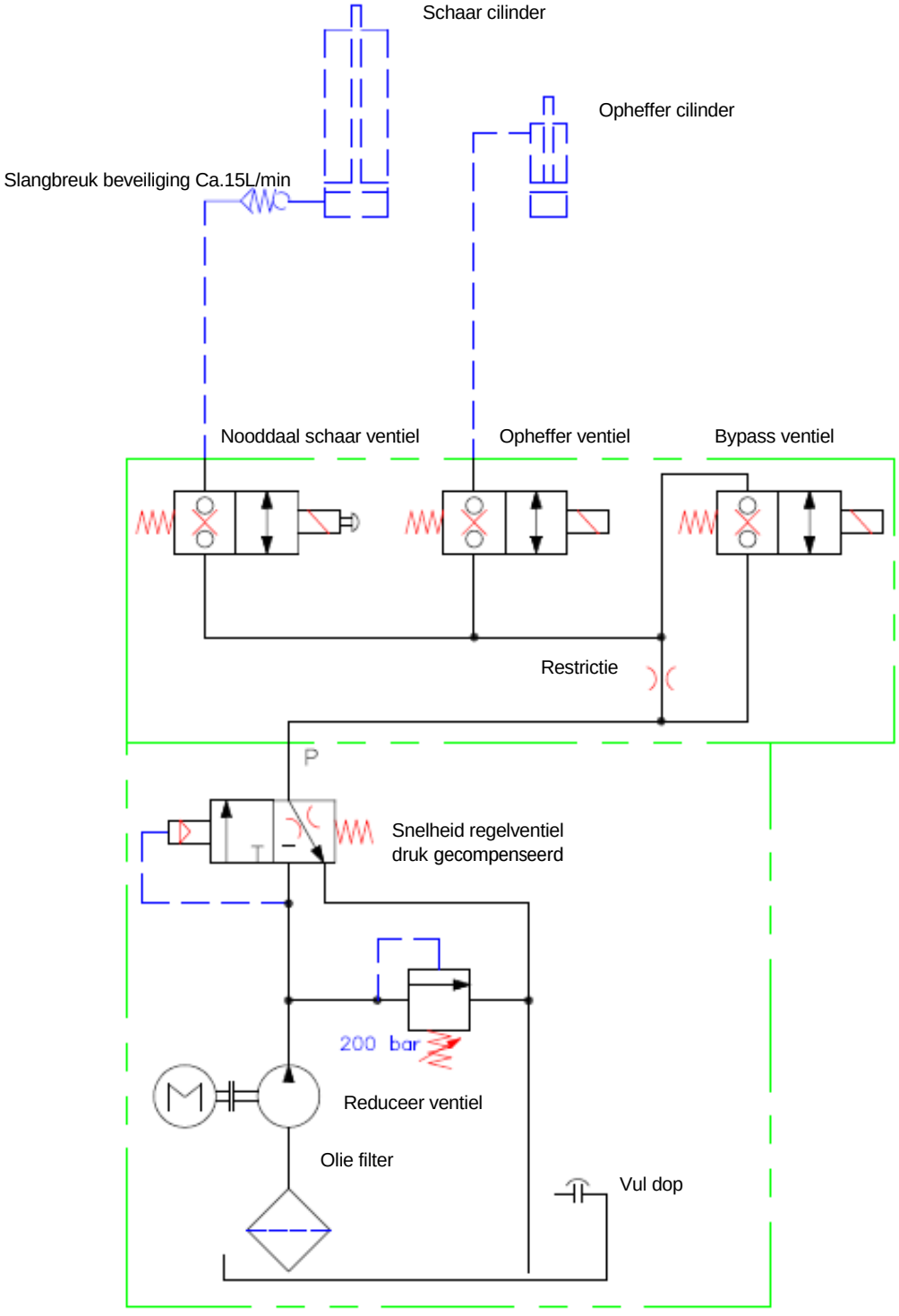
HYDRAULISCH DIAGRAM: BENOMIC